68 mm FFAR SNEB F1 ROCKETS

TYPE 251P

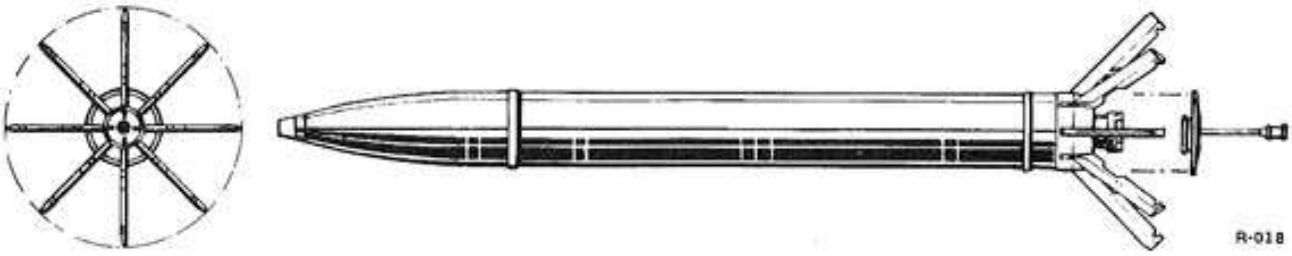

MASS. . . . . 4.30 kg
OVERALL LENGTH. . . . . .834 mm

- Motor Type 25 TT
- Warhead Type 21
- Fuze SNEB Type 24

TYPE 252

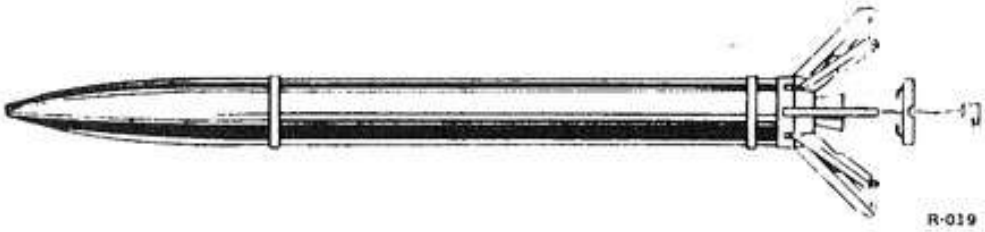

MASS. . . . . 4.38 kg
OVERALL LENGTH. . . . . .826 mm

TYPE 253 AND 256P

MASS. . . . . .5.05 kg (TYPE 253)
MASS. . . . . 6.25 kg (TYPE 356P)
LENGTH. . . . . .911 mm

- Type 253 : Piezo Electric Fuze
- Type 256P : Fuze SNEB Type 24

Figure 1-50. (Sheet 1)

68 mm FFAR SNEB F1 ROCKETS

TYPE 256

MASS. . . . . 6.30 kg
LENGTH. . . . . .936 mm

TYPE 257

MASS. . . . . 8.20 kg
LENGTH. . . . . 1047 mm

Figure 1-50. (Sheet 2)

The second figure indicates the type of fin fitted to the rocket motor; either "umbrella" type 5.
The third figure indicates the type of head.

e.g. Type 251 P

- Calibre - 2 (68 mm)
- Type of fin - 5 (digit of fin type 5)
- Type of head - 1 P (digit of head type 1, air-to-air).

Therefore, a type 251 P rocket is 68 mm fitted with umbrella type fins and the air-to-air H.E. head.
The motor is the type 25 throughout.

TYPE 25 SNEB ROCKET MOTOR (fig. 1-51)

The motor consists of a tube (5) internally threaded at both ends. The front plug (1) closes the tube and permits the fitting of a different types of head.
The rear assembly of the motor consists of a securing ring (8) a sealing ring (9) and the tail unit venturi assembly (11), which is screwed into the tube. Complete water tightness of the sealing ring is achieved by the use of a rubber plug (10) which is blown out under pressure of the gases on firing.
The powder cake (6) has a star shaped conduit cut through its axis. It is inhibited on its outer surface and is housed in the tube.
The propellant is held in position at the front end by means of a washer (4) and a coiled spring (3). The electric igniter (2) is positioned within the front plug. The electric igniter (2) consists of a celluloid cylindrical container filled with black powder. Two electrical resistances mounted in parallel are fitted inside the celluloid container.
The leads from the igniter are threaded through the propellant and motor assembly to avoid actuation of the resistances by electro-magnetic currents. A knot is tied in front of the rubber plug, to ensure that the resistances will not be extracted from the container when an excessive traction is applied onto the electrical connection terminating the leads. The design of the electrical connection is dependant on the rocket-launcher to be used.
The total mass of the motor is 3.260 kg and includes 1.485 kg of propellant.

TYPE 25 SNEB ROCKET MOTOR

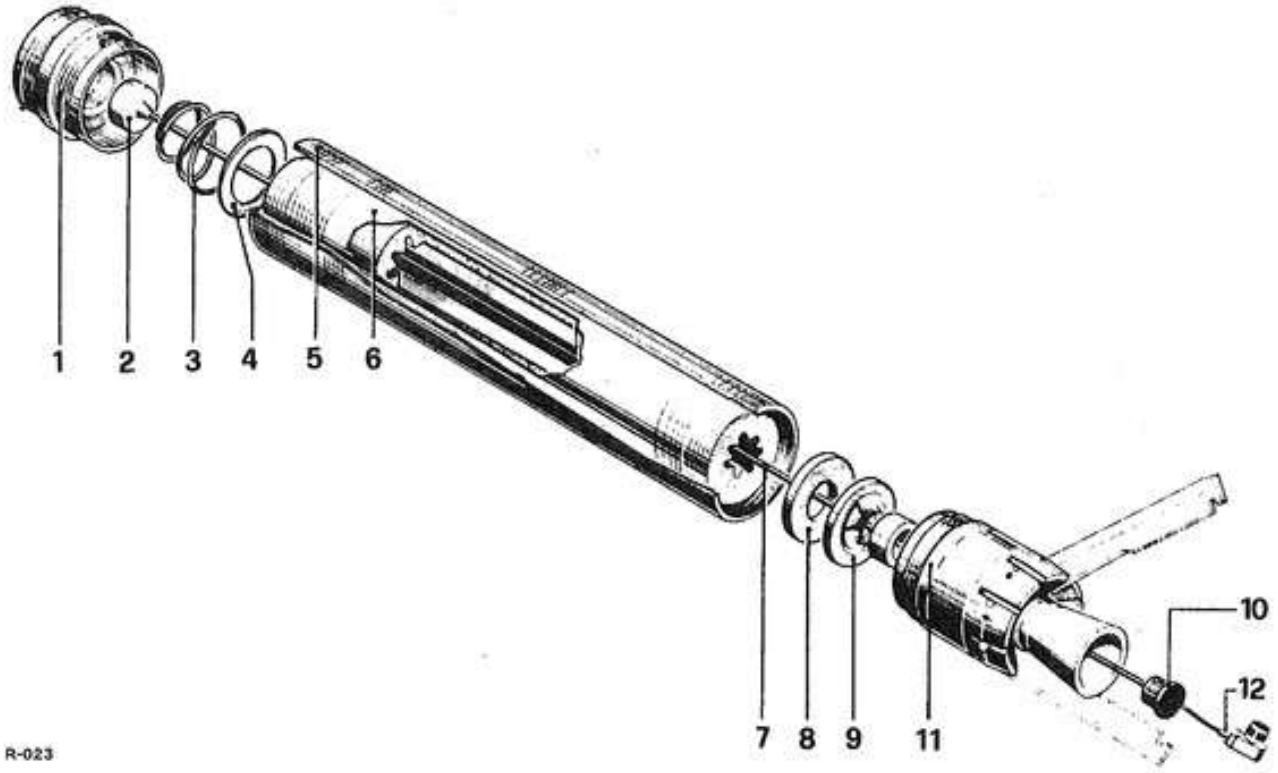

DETAIL OF VENTURI
TAIL UNIT ASSEMBLY (11)

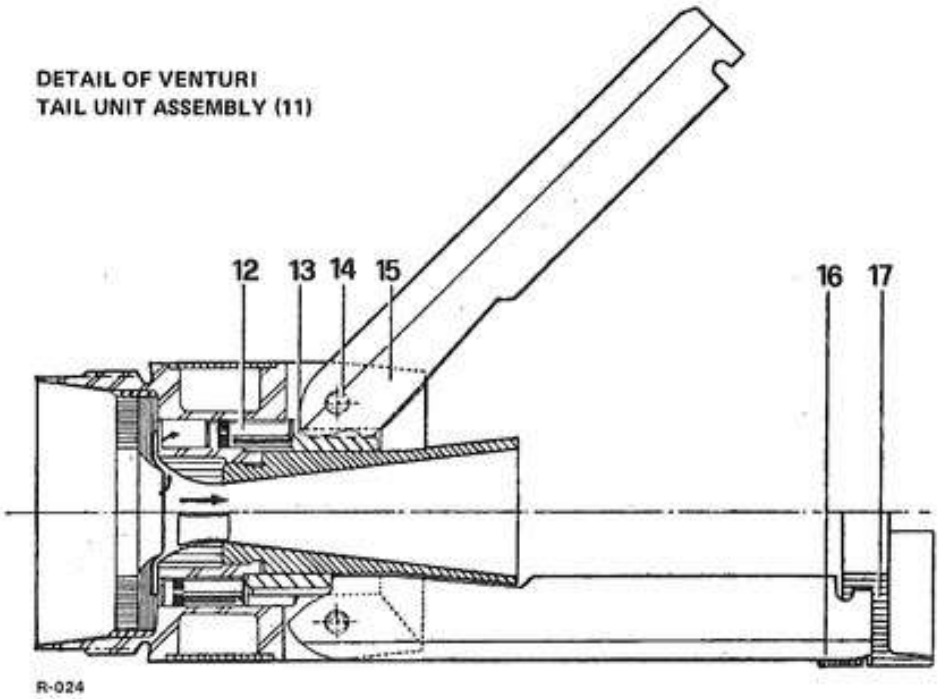

RETAINING CAPS

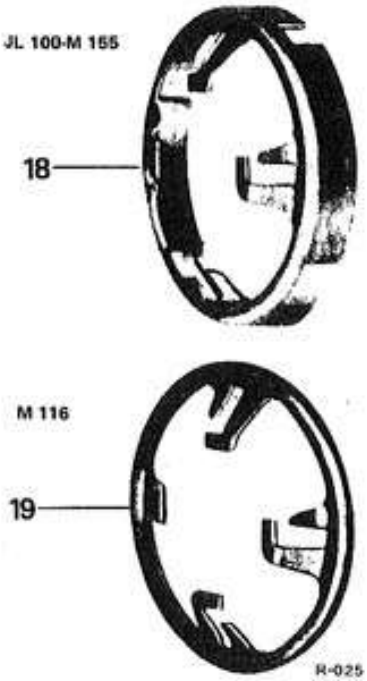

Figure 1-51.

Type 25 SNEB Rocket Motor Operation

By means of an intervalometer, an electric current is passed through the leads to the electric igniter. The two resistance poles in the igniter are coated with a highly sensitive composition. On heating, the composition ignites and activates the black powder, contained in the igniter, which in turn causes ignition in the central channel of the propellant.
During combustion, a constant thrust is maintained, due to the star shaped design of the central channel through the propellant, which gives a constant radial burning throughout its length.
The combustion duration is 0.8 s. at 15°C. The use of TT (all weather) propellant, ensures normal motor functioning for temperature range from -40 to +70°C. In particular, the duration of the combustion remains almost unaffected through these extremes of temperature.
On firing, the electrical igniter activates the black powder which in turn ignites the propellant. The gases pass through the venturi and propel the rocket from the launcher.
As the rocket leaves the launcher, the gases burn through the sealing ring, forcing 4 pistons (12) to rear. The pistons, under pressure of the gases, actuates the opening ring (13) which is in contact with the bents on the eight stabilizing fins (15). As the opening ring is driven to the rear, it causes the fins to rotate on their axis pins (14) until they are locked in the fully open position.
The leading edge of each fin has two chamfers of unequal depth, designed to impart a slow spin to the rocket, thus improving the accuracy. The speed of spin increases in relation to the increase in velocity of the rocket, reaching a maximum of approximately 30 r/s.
During storage and in transit, the fins are held in the folded position by a standard four slotted retaining caps (18 & 19) secured by a plastic ring.
The plastic ring (16) is removed before the rocket is placed in the launcher.
In the event of over-pressure in the rocket motor, and in order to prevent the tube bursting, a deliberate weak point, on the threads of the tube to which the venturi tail unit assembly is screwed, has been provided. With an over-pressure, the rocket will break at this point, blowing off the tail unit assembly, causing an immediate fall in pressure.

WARHEADS FOR 68 mm FFAR SNEB F1 ROCKET

SNEB Type 21P Warhead (fig. 1-52)

The head, made of a light alloy, consists of a rear cylindrical body (6) and an ogive-shaped body at the front (2). The front of the head houses the piezo-electric generator (1) and at the rear the safety arming unit (7) together with the steel plate (5) and the booster charge of 83.5 g of RDX/WAX (4).
For description and functioning of the piezo-electric generator and safety arming unit see description of head Type 23. These components are identical to those contained in the hollow charge head.
The head contains 440 g of poured high explosive (3), consisting of 60/40 RDX/TNT. The head is internally threaded at the rear, enabling it to be screwed to the rocket motor.

SNEB TYPE 21P WARHEAD

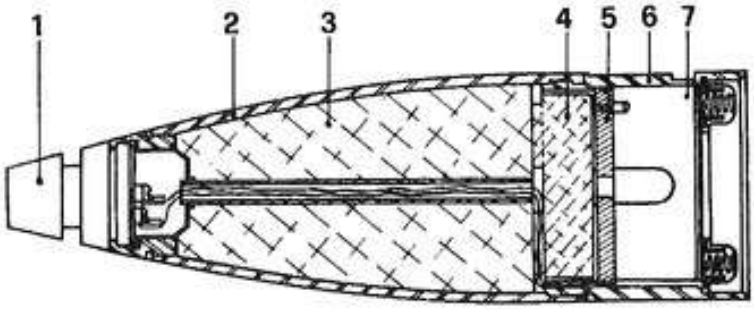

R-026

Figure 1-52.

The complete head has a total mass of 1.050 kg.

Operation - This type of head is fuzed with a piezo-electric fuze, which is an integral part of the head, and as such cannot be removed.
On impact, the distortion of a barium titanate crystal, produces an electrical umpulse which is transmitted to the detonator, which in turn detonates the main charge in the head.
Arming of the fuze and subsequent ignition is only possible when the different mechanical safety devices have functioned, allowing the electrical fuze circuit, and the explosive chain, to be completed.
This type of head has, on impact a very high blast effect and distruptive effect against light-alloy plates.

SNEB Type 23 Warhead (fig. 1-53)

The H.E. hollow charge head type 23 with secondary anti-personnel effect H.E.A.T. warhead, made of light alloy, is ogive--shaped (4) at the front, terminating in a steel body (7) at the rear.
The front of the head houses a crystal of barium titanate (2) enclosed in obturator (1). The rear is internally threaded enabling the head to be screwed on to the rocket motor.
The steel part of the body houses the hollow charge cone (5) and its plug (8), and the high explosive (6 and 9). An electrical detonator is housed in a shutter type mechanism (12) and is connected to the barium titanate crystal, by two connecting wires (3).
On impact, the piezo-electric crystal is distorted, creating an electrical impulse, which is transmitted to the detonator (13) housed in the safety arming unit (12).
The charge contained in the head consists of two parts:

1. 215 g of poured 60/40 RDX/TNT between the copper cone (5) and the steel body (7).
2. 83.5 g cake of compressed RDX/Wax (9) contained in a cup behind the cone.

This charge is isolated from the detonator by a steel plate (10) which is bored through the centre to take a tetryl relay pellet (11).
On the fuze arming, the detonator is brought into line with the relay pellet. This movement of the detonator makes the electrical circuit, between it and the piezo--electric crystal in the nose.
In the non-armed position, the detonator is off-set from the explosive train, and is masked by the steel shutter. On the extremely unlikely event of the detonator functioning, it cannot initiate the main explosive.

Operation - This type of head is fuzed with piezo-electric fuze, which is an integral part of the head, and as such cannot be removed.
On impact, the distortion of a barium titanate crystal, produces an electrical impulse which is transmitted to the detonator, which in turn detonates the main charge in the head.
Arming of the fuze and subsequent ignition is only possible when the different mechanical safety devices have functioned, allowing the electrical fuze circuit, and the explosive chain, to be completed.
In addition to the armour piercing capabilities of the head, the rear portion gives a considerable anti-personnel effect on break up.
When the H.E. filling detonates under the action of the super-quick detonator incorporated in the safety arming unit of the piezo-electric fuzing system, a thin high velocity jet is formed. This jet consists of a mixture of H.E. gases and fine particles of the copper liner and travels at a very high velocity.
On striking the armour the jet exerts a very high pressure which displaces the metal and axial penetration of up to 400 mm thick armour can be achieved.
The perlitic malleable cast iron body of this head enables to produce an even distribution of fragments in size and weight as well as a very effective spatial distribution. The velocity of the fragments is such that they are still dangerous against personnel at distance larger than 30 m from the point of the impact.

SNEB Type 26P Warhead (fig. 1-54)

The anti-personnel, type 26P, warhead is made of a perlitic malleable cast-iron ogive-shaped body (2) at the front on to which is screwed a steel cylindrical body (6) at the rear.
The front of the head houses the piezo-electric generator (1) and at the rear the safety arming unit (7) together with the steel plate (5).
The explosive charge is composed of two fillings:

- a booster charge of 52 g of RDX/WAX.

SNEB TYPE 23 WARHEAD

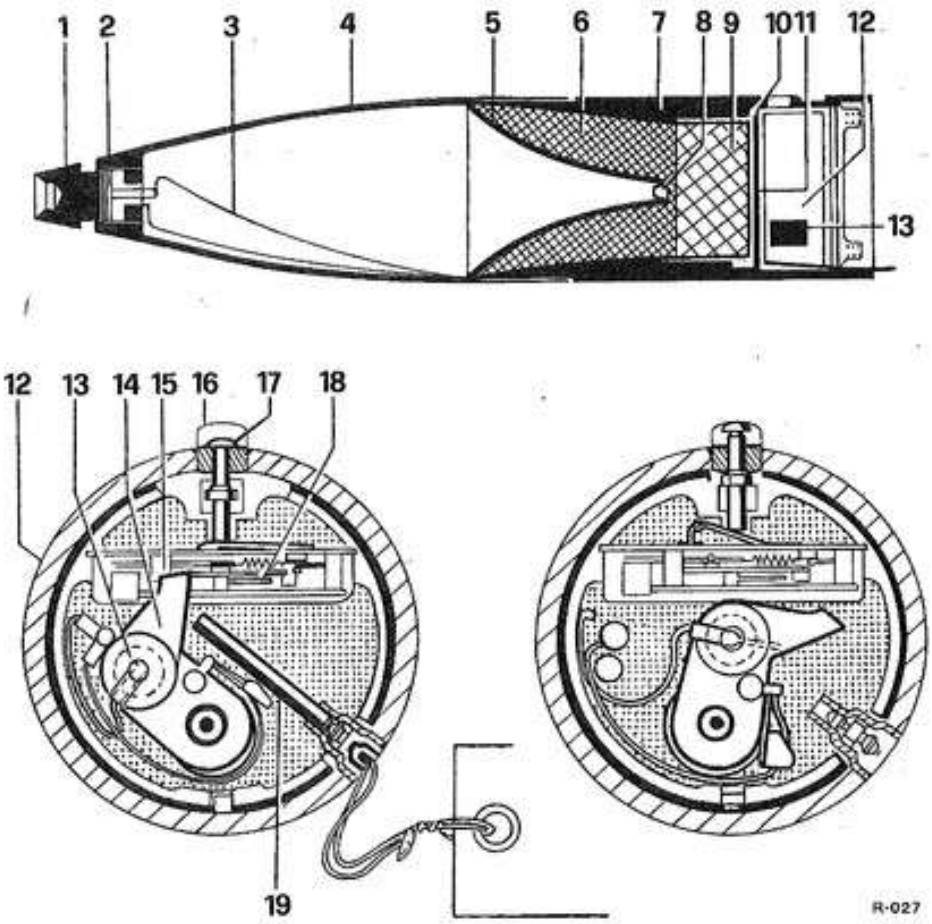

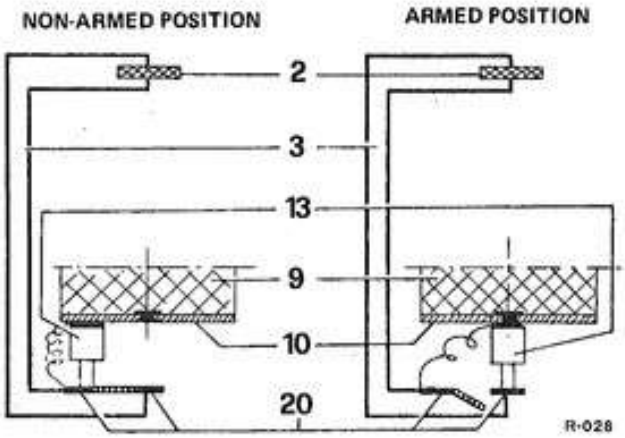

Figure 1-53.

SNEB TYPE 26P WARHEAD

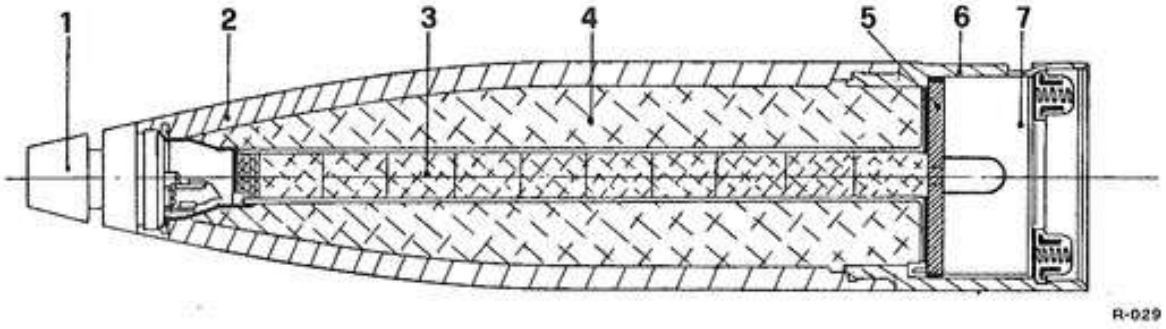

Figure 1-54.

- a main filling of 520 g of TNT.

For description and functioning of the piezo-electric generator and safety arming unit, see previous paragraph.
These components are identical to those contained in the hollow charge head type 23.
The head weights 3 kg.

Operation - This type of head is fuzed with piezo-electric fuze, which is an integral part of the head, and as such cannot be removed.
On impact, the distortion of a barium titanate crystal, produces an electrical impulse which is transmitted to the detonator, which in turn detonates the main charge in the head.
Arming of the fuze and subsequent ignition is only possible when the different mechanical safety devices have functioned, allowing the electrical fuze circuit, and the explosive chain, to be completed.

The perlitic malleable cast iron body of this head enables to produce an even distribution of fragments in size and weight as well as very effective spatial distribution.
The velocity of the fragments is such that they are still dangerous against personnel at distance larger than 30 m from the point of impact.

SNEB Type 27 Warhead (fig. 1-55)

The anti-personnel, type 27, warhead comprises a steel ogival body (2) which is provided of pre-fragmentation grooves. In the front zone it is closed by a cup (1) also used to lodge the fuse. The rear of the body is filled with explosive comprising a booster charged with 135 g of toluene (3) and a charge of 950 g (4). On the rear, a threaded zone permits the installation of the warhead on the rocket motor. A metallic disc is used as rear lock.

SNEB TYPE 27 WARHEAD

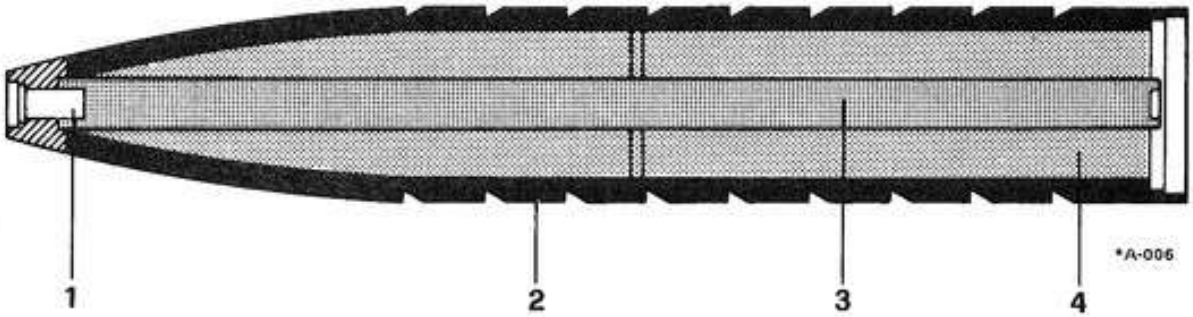

Figure 1-55.

The total mass is 4.653 kg including the SNEB type 22 fuse.
The warhead type 27 total length is 447 mm.
Operation - This type of head is fuzed with piezo-electric fuze, which is an integral part of the head, and as such cannot be removed.
On impact, the distortion of a barium titanate crystal, produces an electrical impulse which is transmitted to the detonator, which in turn detonates the main charge in the head.
Arming of the fuze and subsequent ignition is only possible when the different mechanical safety devices have functioned, allowing the electrical fuze circuit, and the explosive chain, to be completed.
The perlitic malleable cast iron body of this head enables to produce an even distribution of fragments in size and weight as well as very effective spatial distribution.
The velocity of the fragments is such that they are still dangerous against personnel at distance larger than 30 m from the point of impact.

SNEB Type Self-Destruction Marker (fig. 1-56)

The self-destruction marker type 24 comprises an ogive (1) in light alloy which is screwed on the tube (2) and at the other end is screwed on the plate (3). On the rear, a tube (2) is provided with eight holes for fire transmission from the fuse to the explosive charge; these holes are closed by cardboard plugs (4). The assy is sealed by means of a plug (5) and by a toric connection (6).
The warhead is charged with a colored smoke composition of 170 g, the colours yellow, red and green are the most frequently used.
Before being charged on the rocket launcher the warhead is provided of a SNEB, type 21 fuze. This fuze is actuated at a distance that can be preselected, and ignites the charge, which is detonated obtaining a colored smoke having about one metre of diameter, the persistence of which is of various seconds.
The mass is 634 g and the lenght is 178 mm.

FUZES FOR SNEB WARHEADS

SNEB Type 21 Fuze (fig. 1-57)

The SNEB type 21 fuze, is used on the self-destruction colored marker type 24. It comprises the body (16) which has inside two stop plates (20), and an armament ring (5-17-22) provided with two grooves (22) and a firing pin (2). In the front portion of the body is screwed a detonator carrier (21) having in the bottom a transversal slot (4) for the displacement of the detonator (18), under the action of the spring (19); on the top the body loadges a black powder Booster (23); the front zone of the body is closed by a plug (24) incorporating the

SNEB TYPE 24 SELF - DESTRUCTION MARKER

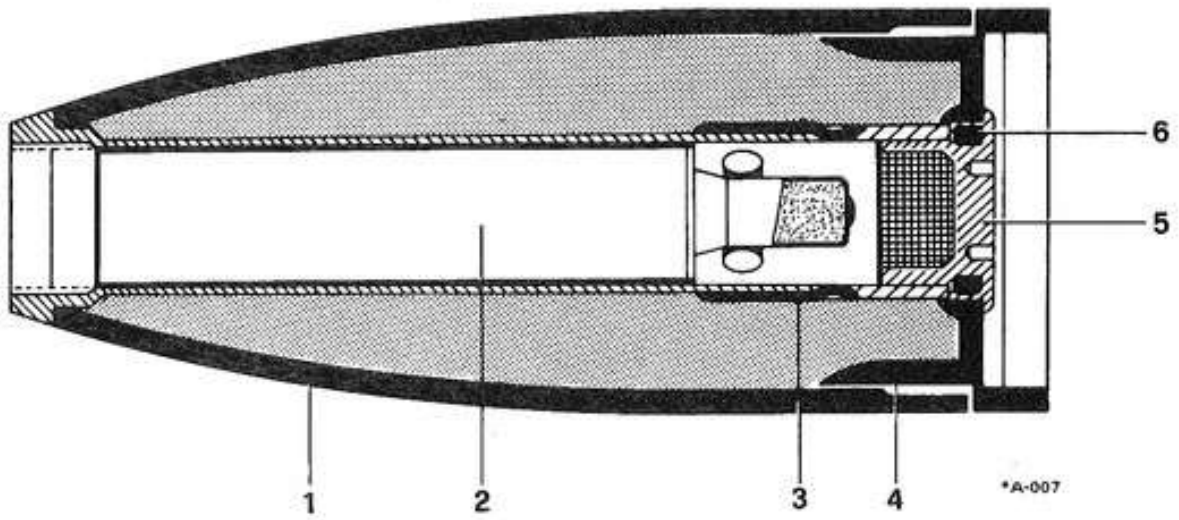

Figure 1-56.

SNEB TYPE 21 FUZE

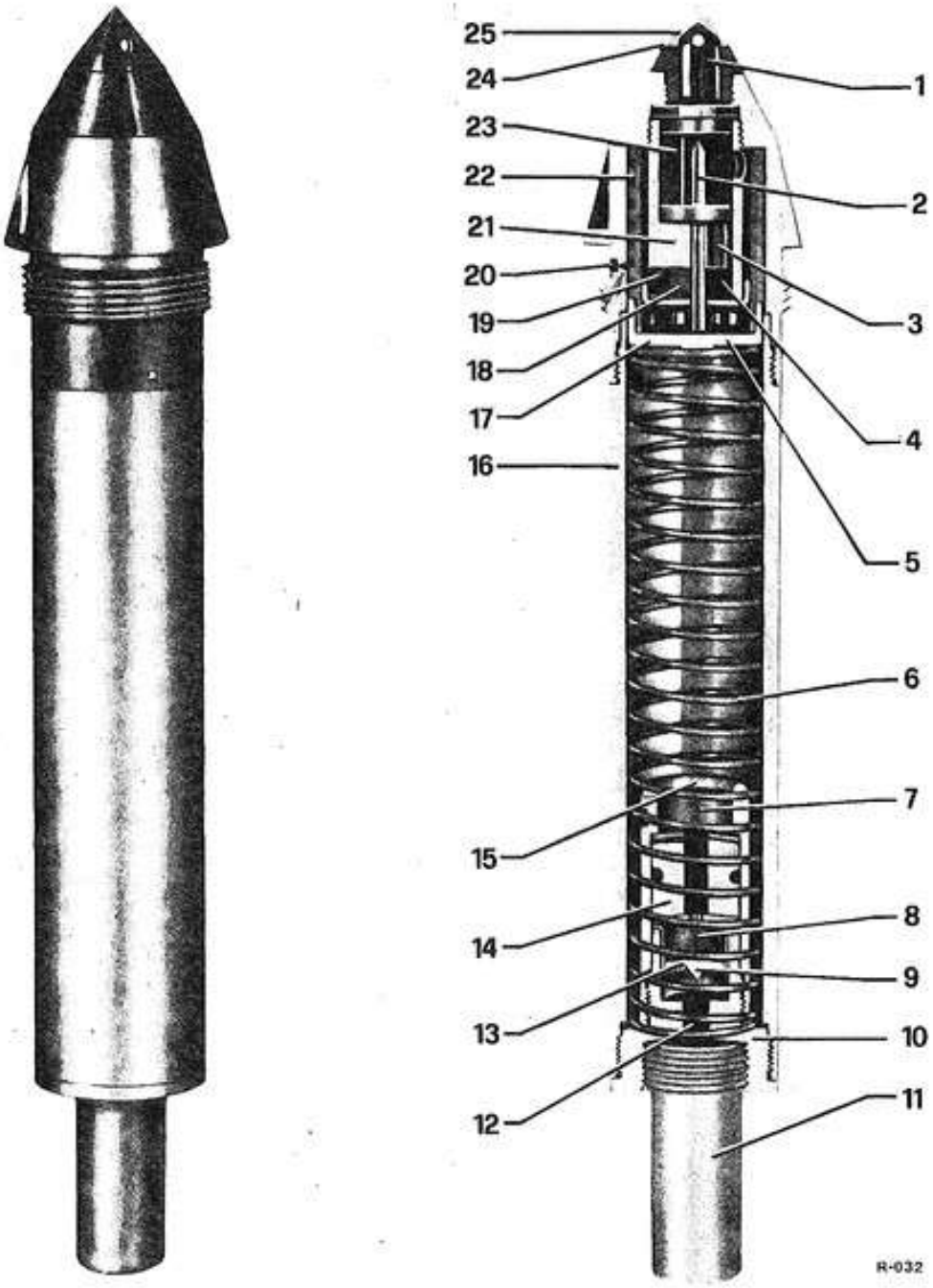

Figure 1-57.

vents (25) and a black powder booster (1). The armament ring (5-17-22) is provided with an armament spring (6). The rear portion of the body is provided with a plug used to support a time delay (10) comprising a black powder booster (7), a time delay (14), a firing pin (13) filled with black powder (8) and a detonator charged with black powder (11).

After the rocket is fired, the armament ring (5-17-22) acts on the spring (6) till its lower zone (17) comes in contact with the

surface (15) of the plug which carries the time delay (10). During this movement the armament ring displaces the firing pin (2) and disengages the detonator (18) that will be placed at the bottom of the slot (4) under the action of its spring (19). At this moment the fuse is armed and the armament train is in line. After the positive acceleration has ended, the armament spring (6) moves forward the armament ring (5-17-22) integral with the firing pin (2). This will strike the detonator (18) that starts the ignition in the black powder (23) and (1), the flame through the holes (3) and (5) sets fire to the device (7) and the delay (14); this delay can be adjusted to be activated at 0,8 2 or 3 seconds from the acceleration completion. The PN which is contained in the cup (13) shatters the same and ejects the item (9) against the detonator (12) that sets to fire the detonator charged with black powder (11).
In case of accidental drop, the armament ring (5-17-22) cannot be lowered because the spring (6) and the lugs (20) prevent it.

SNEB Type 22 Fuze (fig. 1-58)

The SNEB type 22 fuze is used in configuration with the anti-personnel warhead type 27. It comprises three main items:

1. The fuze head which is of steel.
2. The detonator in light alloy, which is charged with lead azide.
3. The booster device of light alloy charged with compressed tetryl.

This fuze, which is utilized on 20 mm rounds, is actuated at impact moment. The type 22 mass is 33.4 g.

Piezo-Electric Fuze

This fuze is integral with the warhead type 23.
Description and operation are illustrated together with type 23 warhead.

SNEB Type 24 Fuze (fig. 1-59)

In A condition the fuze is ready for firing. The projection (17) of the firing pin (6) increases the sensitivity of the fuze that is sealed by the item (1).
During the rocket motor operation, the parts of the fuze are in the position illustrated in B condition. The armament ring (2) moved by the force of inertia compresses the spring (12); the tabs (19) of the ring (18), which is connected with the ring (13), are engaged with the armament ring groove (4); the ball (15) is on the groove (3).
After the end of the position acceleration as shown in C condition, the spring (12) moves forward the armament ring (2) and the ring (13) till the item (1) with the interposition of the ball (15). The balls (7) are disengaged and, under the deceleration action they will be moved in the position illustrated in C condition. At this moment the fuze is armed and will be operated at the impact.

SNEB TYPE 22 FUZE

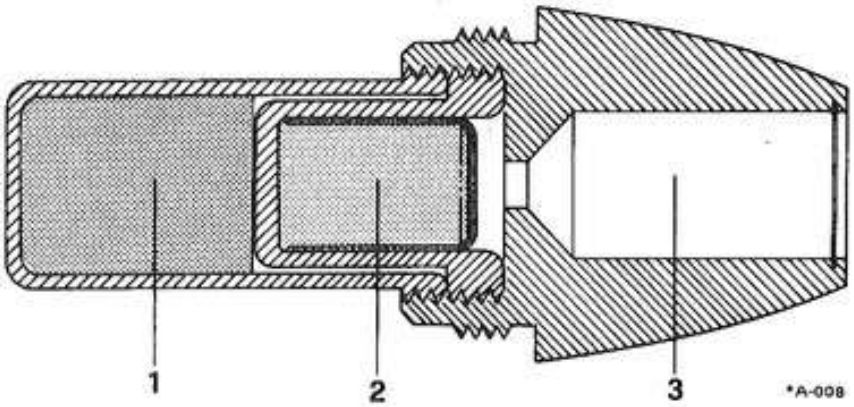

Figure 1-58.

SNEB TYPE 24 FUZE

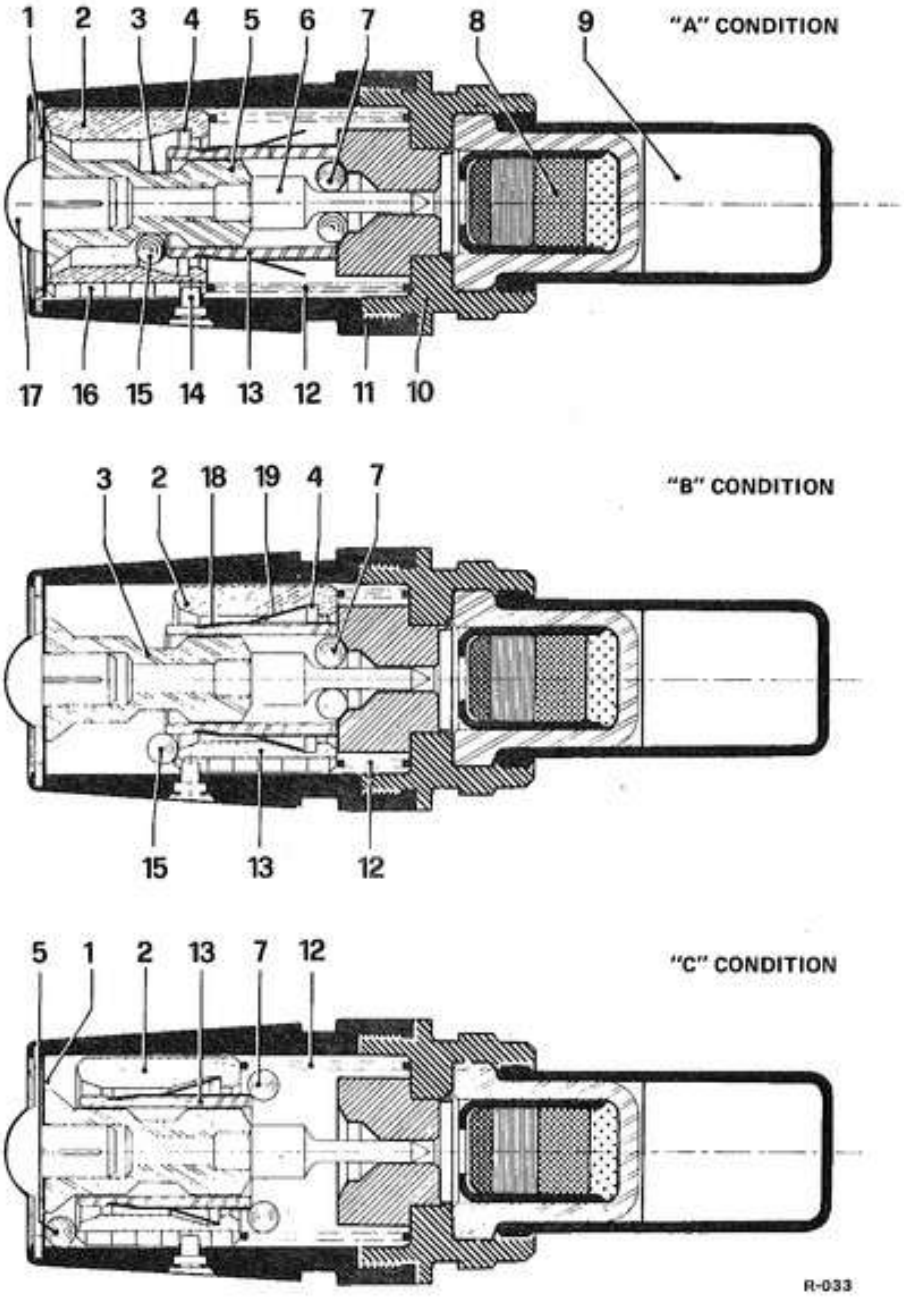

Figure 1-59.

Safety is obtained because:

1. In case of accidental drop the armament ring is maintained in position by the spring (12) and by the lugs (14).

2. In case of accidental drop on the nose the firing pin (5) is prevented from moving forward by the balls.

3. Safety when on the launcher. In case of accidental decrease of speed inside the launcher with a premature disengagement of the safety balls, the fuze is so featured that the percussion is avoided when the rocket is again accelerated.

The mass of this fuze when ready to be fired is 41 g.

When not armed the firing pin (6) integral with the nose (11) cannot reach the detonator (8) because on its way are placed the balls (7). These are maintained in position by means of a ring (13) which is locked by its ball (15) inside the groove (3) of the firing pin (3). The locking action is also effectuated by the armament ring.

MATRA 155M ROCKET LAUNCHER (fig.1-60)

The model 155M rocket launcher is designed for air-to-air and air-to-ground use with 18 rockets, SNEB 68 mm, type 253 anti-personnel, rockets are fired through an intervalometer, step type, mounted inside the launcher.

MATRA F2 ROCKET LAUNCHER (fig. 1-61)

The model F2 rocket launcher is a six tubes launcher, designed for air-to-air and air-to-ground operations with 68 mm SNEB rockets.
A step type intervalometer, mounted inside the launcher provides to fire the rockets at 0.03 s interval.

ROCKET OPERATION (ANY TYPE)

The rocket firing sequence is determined by an intervalometer comprised in each container.
The rocket containers are attached to the pylons through the pylon rack and are laterally stabilized by the sway braces.
Firing of the FFAR rockets is possible only on condition that the landing gear control lever is set at UP. On the ground, the circuit can be tested by moving the switch to ON and holding it there. The FFAR rocket circuit is powered from the secondary bus bar. Arming of the FFAR rocket circuit for operation is made by moving the "ARM" switch to ARM and moving up the store arming switches corresponding to the rocket launchers that it is desired to fire. The number of rockets to be fired in each salvo is selected through the "SEQUENCE" switch. With the switch in the SINGLE position, a single rocket is fired from each selected rocket container whenever the firing button switch is depressed; in the RIPPLE position, the rockets will fire continuosly from the selected containers until the firing button is released. This is due to a relay which provides a second power supply for the container during the firing of a burst of rockets. In case a single rocket is fired, the second power supply to the container is interrupted by a relay.

NOTE

Not all types of rocket container incorporate provisions for in-flight selection of the number of rockets to be fired. On many types this selection must be made on the ground by means of a special switch comprised in the rocket container.

Pushing the firing button switch feeds current to the rocket container through relay A15. The rockets will thus be fired in the sequence determined by the rocket container intervalometer and in the number preset through the "SEQUENCE" switch.

WARNING

When more than two rocket launchers are carried, simultaneous firing action is allowed only by two symmetrical launchers a time.

FLARES

MK 24 AND LUU-1/B FLARE

The LUU-1/B flare marker and the MK24 illumination flare, are similar with a different candle/parachute assembly installed (figure 1-62). It is designed to be aircraft launched. The marker consists of an outer aluminum cylindrical container that encloses an ejection fuze, an ignition fuze, a lanyard, a parachute, and a candle (illuminating composition). During handling, a safety cotter pin is inserted through the ignition setting dial to keep the marker from accidentally being functioned. The LUU-1/B flare marker is 4.87-inch in diameter by 36-inch long and weights 26 lb. The marker is ejected from the case by a preset variable delay time fuze. The marker is then ignited by a preset variable delay time fuze. The ejection delay, which is adjustable from 5 to 30 s., allows the marker to fall a predetermined distance from release to ejection and suspension of the candle. The ignition delay, which is adjustable from 10 to 30 s., allows the suspended candle to fall a predetermined distance before igniting. When released, the marker falls, exerting a force in excess of 12 lb on the arming lanyard, thus pulling it from the marker and arming the ejection delay fuze.